GALLOP SCISSOR LOCK	COLOURS IN MOTION	Ver. 1	03/6/202024
		Section	3700

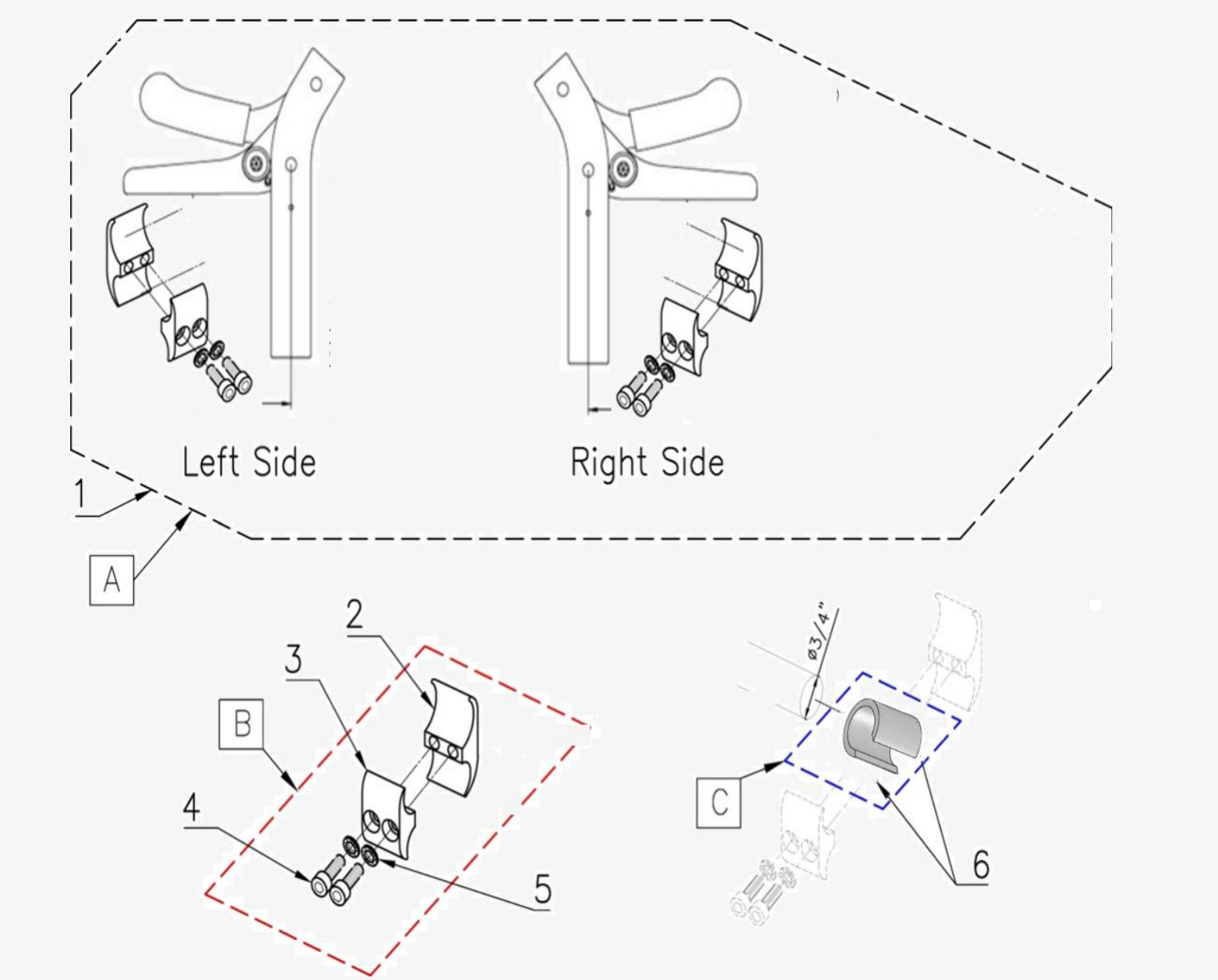

POS	Assy #	#	Parts #	QTY	Color	Remark	MSRP	NOTE
A	3700-01A	1	ABL-170(L) ABL-170(R)	1set	Blk	L:1, R:1 & 2 Clamp sets	per Set	1set/chair
B	-	2	0449-301	1set	Blk	PTL Clamp Set	per ea.	2 ea/chair
C	-	6	0040-099	2	Sil	Split Spacer For Zephyr	per ea.	2 ea/chair

POS	Assy #	#	Parts #	QTY	Color	Remark	MSRP	Note